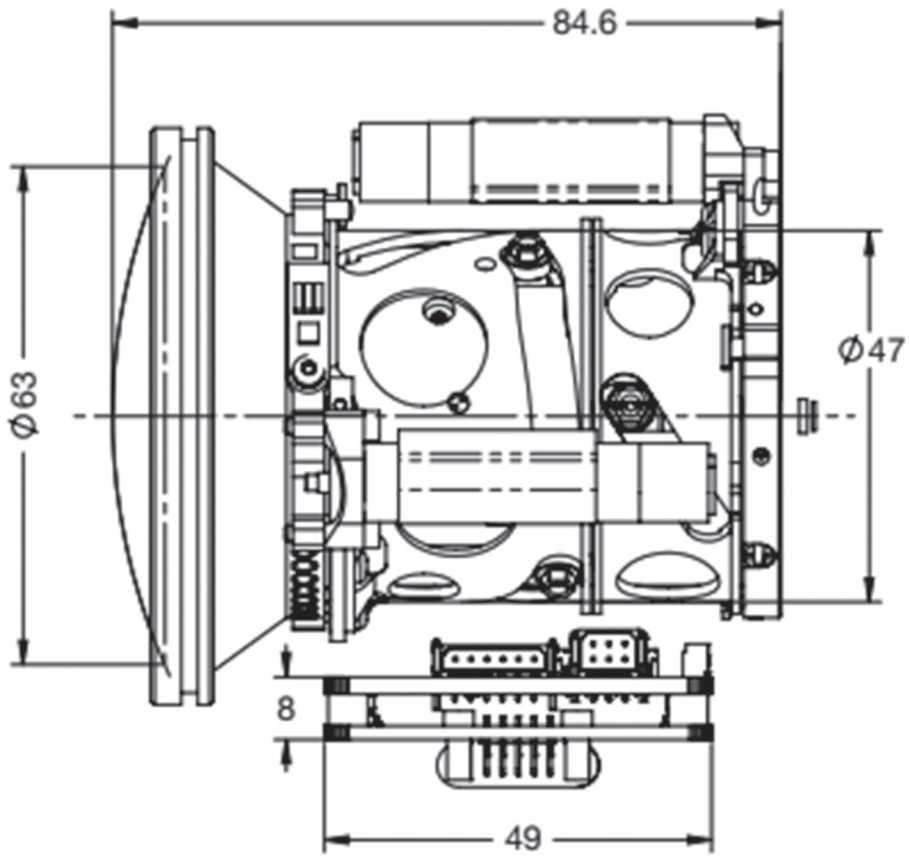

PLEASE NOTE: The drawing provided here is primarily a representation and may not accurately reflect the product's actual dimensions and specifications. For precise integration specifications, we recommend contacting your local sales representative.

Ophir®